Thinking of you
Electrolux

User manual

Ceramic Glass Hob

EHC644BA EHC944BA

WE'RE THINKING OF YOU

Thank you for purchasing an Electrolux appliance. You've chosen a product that brings with it decades of professional experience and innovation. Ingenious and stylish, it has been designed with you in mind. So whenever you use it, you can be safe in the knowledge that you'll get great results every time.

Welcome to Electrolux.

BEFORE USING YOUR APPLIANCE

Before you use the cooktop, we recommend that you read through the whole user manual which provides the description of the cooktop and its functions. To avoid the risks that are always present when you use a gas appliance, it is important that the cooktop is installed correctly and that you read the safety instructions carefully to avoid misuse and hazards.

For future reference, please store this booklet in a safe place.

CONDITIONS OF USE

This appliance is intended to be used in household and similar applications such as:

- Staff kitchen areas in shops, offices and other working environments
- Farm houses
- By clients in hotels, motels and other residential type environments
- Bed and breakfast type environments

BEFORE YOU CALL

Please ensure you read the instruction manual fully before you call for service, or a full service fee could be applicable.

RECORD MODEL AND SERIAL NUMBER HERE:

Model: _____

Serial No: _____

CONTENTS

3 **Safety information**
5 **Product description**
8 **Operating instructions**
12 **Tips on cooking and frying**
13 **Care and cleaning**
14 **Troubleshooting**
15 **Technical data**
16 **Installation instructions**
17 **Assembly**
18 **Notes**
19 **Warranty**

LEGEND

WARNING!
This symbol indicates information concerning your personal safety.

CAUTION!
This symbol indicates information on how to avoid damaging the cooktop.

IMPORTANT!
This symbol indicates tips and information about use of the cooktop

ENVIRONMENT!
This symbol indicates tips and information about economical and ecological use of the cooktop.

SAFETY INFORMATION

Please read the user manual carefully and store in a handy place for later reference. Pass the user manual on to possible new owners of the cooktop.

Read the following carefully to avoid damage or injury.

This symbol indicates never to do this

This symbol indicates always do this

General safety

WARNING!
Please comply with these instructions. If you do not, any damage resulting is not covered by the warranty.

Correct use

⊘	This appliance is not intended for use by persons (including children) with reduced physical, sensory or mental capabilities, or lack of experience and knowledge, unless they have been given supervision or instruction concerning use of the appliance by a person responsible for their safety.
⊘	Do not leave the appliance unattended during operation.
✓	This appliance should be used only for normal domestic cooking and frying of food.
⊘	The appliance must not be used as a work surface or as a storage surface.
⊘	Additions or modifications to the appliance are not permitted.
⊘	Do not place or store flammable liquids, highly inflammable materials or fusible objects (e.g. plastic film, plastic, aluminium) on or near the appliance.

Children's safety

✓	The cooking zones will become hot when you cook. Therefore, always keep small children away from the appliance.
⊘	The appliance is not intended for use by young children or infirm persons without supervision.
✓	Children should be supervised to ensure that they do not play with the appliance.

WARNING!
Accessible parts will become hot during use. To avoid burns young children should be kept away

Correct operation

✓	Always monitor the appliance during operation. Do not use an external timer or a separated remote control system to operate the appliance.
✓	Only use the appliance for domestic cooking tasks..
⊘	Do not use the appliance as a work or a storage surface.
⊘	Do not put or keep very flammable liquids and materials, or fusible objects (made of plastic or aluminium) on or near the appliance.
⊘	Other than the connection point in the terminal block, do not let the electrical supply cord touch the appliance or hot cookware. Ensure electrical supply cord is not tangled.

General safety

✓	The appliance may only be installed and connected by trained, registered service engineers.
✓	Built-in appliances may only be used after they have been built into suitable built-in units and work surfaces that meet standards.
✓	In the event of faults with the appliance or damage to the glass ceramic (cracks, scratches or splits), the appliance must be switched off and disconnected from the electrical supply, to prevent the possibility of an electric shock.
✓	Repairs to the appliance must only be carried out by trained registered service engineers.

Safety during use

✓	Remove stickers and film from the glass ceramic.
⊘	There is the risk of burns from the appliance if used carelessly.
⊘	Cables from electrical appliances must not touch the hot surface of the appliance or hot cookware.
⊘	Overheated fats and oils can ignite very quickly. Warning! Fire hazard!
✓	Switch the cooking zones off after each use.

WARNING!
If the surface is cracked, switch off the appliance to avoid possibility of electric shock.

SAFETY INFORMATION

Safety when cleaning

✓	For cleaning, the appliance must be switched off and cooled down.
⊘	For safety reasons, the cleaning of the appliance with steam jet or high pressure cleaning equipment is not permitted.

How to avoid damage to the appliance

⊘	The glass ceramic can be damaged by objects falling onto it.
⊘	The edge of the glass ceramic can be damaged by being knocked by the cookware.
⊘	Cookware made of cast iron, cast aluminium or with damaged bottoms can scratch the glass ceramic if pushed across the surface.
✓	Before spillage can become burnt on to the cooking surface, remove it with a damp cloth.
✓	To avoid damaging cookware and glass ceramics, do not allow saucepans or frying pans to boil dry.
⊘	Do not use the cooking zones with empty cookware or without cookware.
⊘	Do not let cookware boil dry to prevent damage to cookware and the ceramic glass.
⊘	Do not cover the parts of the appliance with aluminium foil.
⊘	Please note: Damage including broken glass or scratches caused by misuse outlined above is not covered under warranty.

PRODUCT DESCRIPTION

Cooking surface layout

EHC644BA

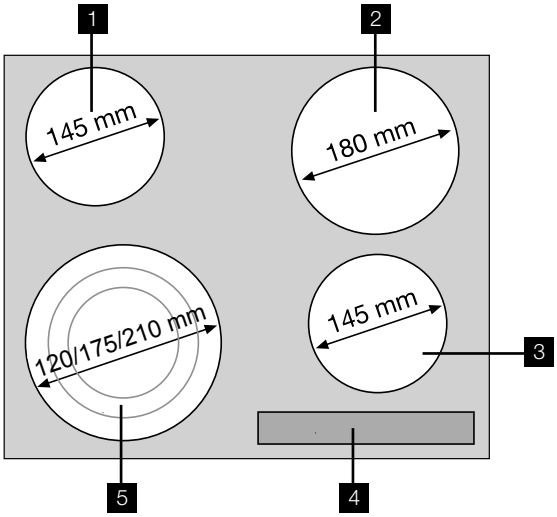

1 Single cooking zone 1200W
2 Single cooking zone 1800W
3 Single cooking zone 1200W
4 Control panel
5 Triple cooking zone 2300/1600/800W

EHC944BA

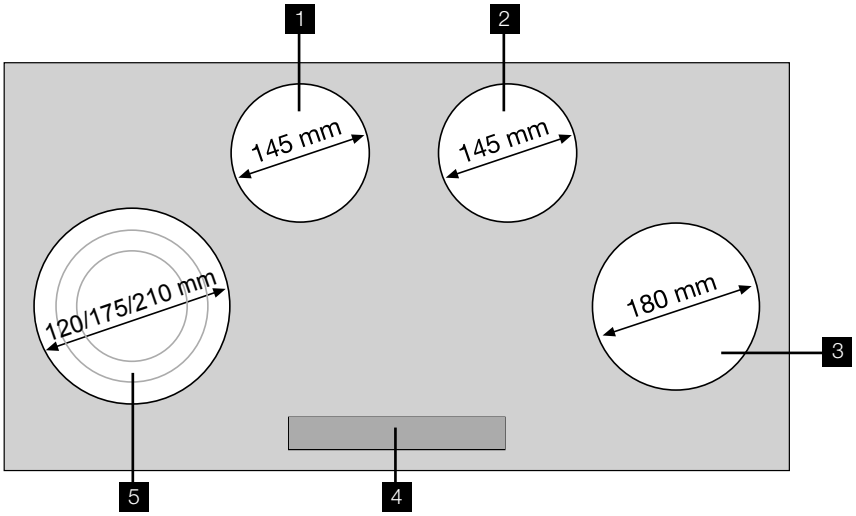

1 Single cooking zone 1200W
2 Single cooking zone 1200W
3 Single cooking zone 1800W
4 Control panel
5 Triple cooking zone 2300/1600/800W

PRODUCT DESCRIPTION

Control panel layout

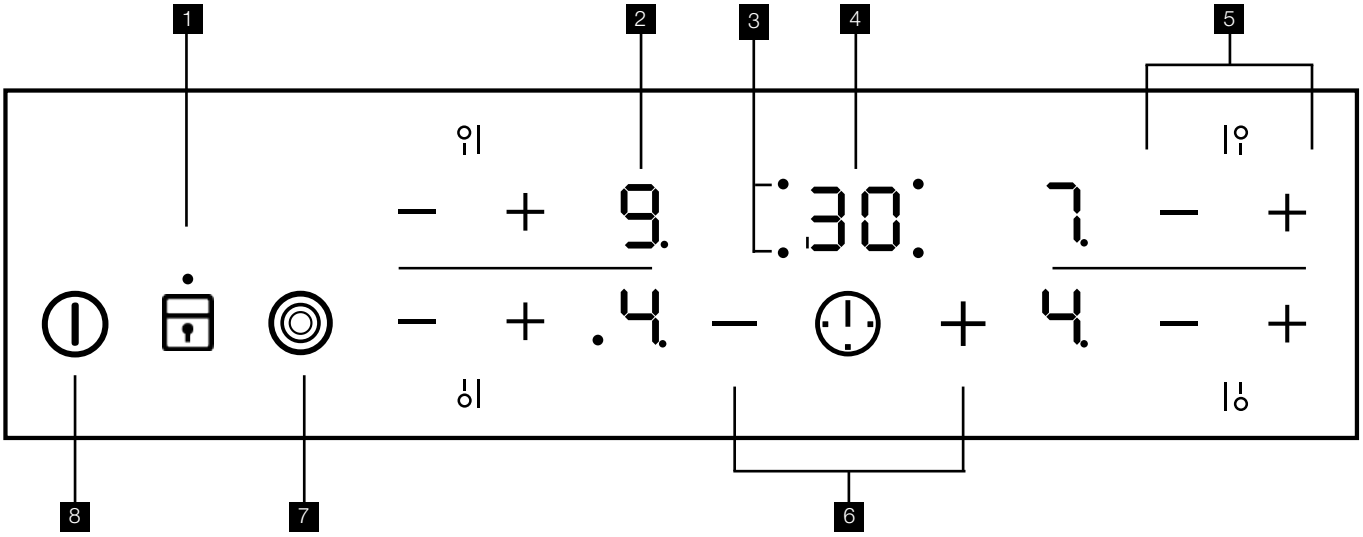

1 Lock with pilot light
2 Display
3 Cooking zone indicators of Timer
4 Timer display
5 Heat setting selection
6 Timer
7 Triple ring cooking zone
8 On/Off with power indicator

Touch Control sensor fields

The appliance is operated using Touch Control sensor fields. Functions are controlled by touching sensor fields and confirmed by displays and acoustic signals. Touch the sensor fields from below, without covering other sensor fields.

	Sensor field	Function
⏻	On / Off	To switch the appliance on and off
+	Increase settings	To increase heat settings
–	Reduce settings	To reduce heat settings
⏲	Timer	To select timer settings
+	Increase settings	To increase Timer time
–	Reduce settings	To reduce Timer time
🔒	Lock	To lock/unlock the control panel
◎	Triple ring switch	To switch outer rings on and off

PRODUCT DESCRIPTION

Heat setting displays

Display		Description
0		Cooking zone is switched off
u	Keep warm setting	Keep warm setting is set
1 - 9	Heat settings	Heat setting is set
A	Automatic warm up function	Automatic warm-up function is activated
E	Error	Malfunction has occurred
H	Residual heat	Cooking zone is still hot
L	Child safety device	Lock/child safety device is activated
-	Automatic switch off	Switch off is active

Residual heat indicator

WARNING!
Risk of burns from residual heat. After being switched off, the cooking zones need some time to cool down. Look at the residual heat indicator H.

IMPORTANT!
Residual heat can be used for melting and keeping food warm.

OPERATING INSTRUCTIONS

Switching the appliance on and off

	Control panel	Display	Pilot light
Switch on	Touch ⏻ for 2 seconds	0 / H	lights up
Switch off	Touch ⏻ for 2 seconds	H / none	goes out

IMPORTANT!

After switching on, within approx. 10 seconds a heat setting or a function must be set, otherwise the appliance automatically switches itself off.

Setting the heat setting

	Control panel	Indicator
To increase	Touch +	u to 9
To decrease	Touch –	9 to 0
To switch off	Touch and at the same time	0

IMPORTANT!

The keep warm setting u lies between 0 and 1. It is used to keep food warm.

Switching the outside ring on and off

By switching the outside rings on or off, the effective heating surface can be matched to the size of the cookware.

Triple cooking zone	Sensor panel	Power Indicator
To switch on the middle ring	Touch ◎ for 1-2 seconds	One power indicator is lit
To switch on the outside ring	Touch ◎ for 1-2 seconds	Two power indicators are lit
To switch off the outside ring	Touch ◎ for 1-2 seconds	The second power indicator goes out
To switch off the middle ring	Touch ◎ for 1-2 seconds	The first power indicator goes out

IMPORTANT!

Before an outside ring can be switched on, the inside ring must be switched on.

Locking/unlocking the control panel

The control panel, with the exception of the “On/Off” sensor field, can be locked at any time in order to prevent the settings being changed e.g. by wiping over the panel with a cloth.

	Control panel	Display
Switch on	Touch 🔒	L (for 5 seconds)
Switch off	Touch 🔒	the previously set heat setting

IMPORTANT!

When you switch the appliance off, the locking function is automatically switched off.

OPERATING INSTRUCTIONS

Using the automatic warm-up function

All cooking zones are equipped with an automatic warm up function When setting a heat setting using +, when starting from 0, the cooking zone switches to full power for a certain amount of time and then automatically switches back to the heat setting set.

	Control panel	Display	Pilot light
Switch on (only when starting at 0)	Touch +	1 to 8	A (after 5 seconds)
Switch off	Touch –	8 to 8 / u	8 to u
Not used	Touch –	9 to u	9 to u

IMPORTANT!

If during the automatic warm up A a higher heat setting is selected, e.g. from 3 to 5, the automatic warm up is adjusted.

IMPORTANT!

If there is still residual heat on the cooking zone (display H), the automatic warm up is not performed.

The length of time that the automatic warm up function

Heat setting	Length of the automatic warm up (min:sec)
u	0:30
1	1:00
2	1:40
3	4:50
4	6:30
5	10:10
6	2:00
7	3:30
8	4:30
9	---

The child safety device

The child safety device prevents unintentional use of the appliance.

Switching on the child safety device:

- Start the hob with ⏻. Do not set the heat settings.
- Touch 🔒 for 4 seconds. The symbol L comes on.
- The child safety device is switched on.

Switching off the child safety device:

- Start the hob with ⏻. Do not set the heat settings. Touch 🔒 for 4 seconds. The symbol 0 comes on.
- Stop the hob with ⏻.
- The child safety device is switched off.

IMPORTANT!

The child safety device can only be switched on and off, if no heat setting is set.

Overriding the child safety device:

The child safety device can be switched off in this way for a single cooking session; it remains activated afterwards.

- Start the hob with ⏻. The symbol L comes on.
- Touch 🔒 for 4 seconds. The symbol 0 comes on.

Until the appliance is next switched off, it can used as normal. After switching off the appliance, the child safety device is active again.

IMPORTANT!

After overriding the child safety device, a heat setting or a function must be set within approx. 10 seconds, otherwise the appliance automatically switches itself off.

OPERATING INSTRUCTIONS

Using the timer

Function	Condition	Outcome after the time has elapsed
Automatic cut-out	A heat setting is set	Acoustic signal 00 flashes Cooking zone switches off
Countdown timer	Cooking zones not in use	Acoustic signal 00 flashes

IMPORTANT!

If a heat setting is set on this cooking zone in addition to a countdown timer, the cooking zone is switched off after the time set has elapsed.

IMPORTANT!

If a cooking zone is switched off, the timer function set is also switched off.

Step	Control panel	Display	
1	Touch ⏲ once	Pilot light of the first cooking zone flashes	.00
2	Touch ⏲ once	Pilot light of the second cooking zone flashes	˙00
3	Touch ⏲ once	Pilot light of the third cooking zone flashes	00˙
4	Touch ⏲ once	Pilot light of the fourth cooking zone flashes	00.

IMPORTANT!

If the pilot light is flashing more slowly, the heat setting can be set or modified.

IMPORTANT!

If other timer functions are set, after a few seconds the shortest remaining time of all the timer functions is displayed and the corresponding pilot light flashes.

Setting the time

Step	Control panel	Indicator
1	Select ⏲ cooking zone	Pilot light for the cooking zone selected flashes
2	Touch + or −	00 to 99 minutes
After a few seconds the pilot light flashes more slowly. The time is set. The time counts down.		

Switching off the timer function

Step	Control panel	Indicator
1	Select ⏲ cooking zone	Pilot light for the cooking zone selected flashes
2	Touch −	The time remaining counts backwards to 00
After a few seconds the pilot light flashes more slowly. The time is set. The time counts down.		

OPERATING INSTRUCTIONS

Changing the time

Step	Control panel	Indicator
1	Select ⏲ cooking zone	Pilot light of the selected cooking zone flashes faster. Time remaining is displayed
2	Touch + or −	01 to 99 minutes
After a few seconds the pilot light flashes more slowly. The time is set. The time counts down.		

Displaying the time remaining for a cooking zone

Control panel field	Display
Select ⏲ cooking zone	Pilot light of the cooking zone selected flashes faster The time remaining is displayed
After a few seconds the pilot light flashes more slowly.	

Switching off the acoustic signal

Control panel field	Display
Touch ⏲	The acoustic signal to acknowledge.
The acoustic signal stops.	

Automatic switch off

Cooking surface

- If after switching on the cooking surface, a heat setting is not set for a cooking zone within approx. 10 seconds, the cooking surface automatically switches itself off.
- If one or more sensor fields are covered by objects (a pan, cloths, etc.) for longer than approx. 10 seconds, a signal sounds and the cooking surface switches off automatically.
- If all cooking zones are switched off, the cooking surface automatically switches it- self off after approx. 10 seconds.

Control panel

When the appliance is switched off, if one or more of the sensor fields on the control panel are covered for more that 10 seconds, an acoustic signal sounds. The acoustic signal switches itself off automatically when the sensor fields are no longer covered.

Cooking zones

If one of the cooking zones is not switched off after a certain time, or if the heat setting is not modified, the relevant cooking zone switches off automatically. - is displayed. Before being used again, the cooking zone must be set to 0.

Heat setting	Switches off after
u , 1 - 2	6 hours
3 - 4	5 hours
5 - 9	4 hours
6 -	1.5 hours

TIPS ON COOKING AND FRYING

Information on acrylamides

According to the latest scientific knowledge, intensive browning of food, especially in products containing starch, can constitute a health risk due to acrylamides. Therefore we recommend cooking at the lowest possible temperatures and not browning foods too much.

Cookware

- You can recognise good cookware from the bottoms of the pans. The bottom should be as thick and flat as possible.
- Cookware made of enamelled steel or with aluminium or copper bottoms can leave discolorations on the glass ceramic surface which are difficult or impossible to remove.

Energy saving

- Always place cookware on the cooking zone before it is switched on.
- Switch cooking zones off before the end of the cooking time, to take advantage of residual heat.
- If possible, always place lids on the pans.

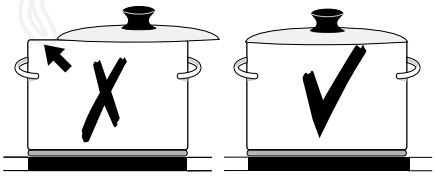

- Bottom of pans and cooking zones should be the same size.

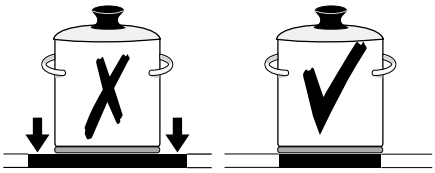

CARE AND CLEANING

WARNING!
Watch out! Risk of burns from residual heat.

WARNING!
Sharp objects and abrasive cleaning materials will damage the appliance. Clean with water and washing up liquid.

WARNING!
Sharp cleaning agents will damage the appliance. Remove residues with water and washing up liquid.

Cleaning the appliance after each use

1. Wipe the appliance with a damp cloth and a little washing up liquid.
2. Rub the appliance dry using a clean cloth.

Removing deposits

Type of dirt	Remove		
	At once	When the appliance has cooled down	Using
Sugar, food containing sugar	Yes	---	A scraper[1)]
Plastics, tin foil	Yes	---	A scraper[1)]
Limescale and water rings	---	Yes	Cleaner for glass ceramic or stainless steel[1)]
Fat splashes	---	Yes	Cleaner for glass ceramic or stainless steel[1)]
shiny metallic discoloration	---	Yes	Cleaner for glass ceramic or stainless steel[1)]

[1)] *Scrapers and cleaners for glass ceramic and stainless steel can be purchased in specialized shops.

Removing deposits

1. Place a scraper on the glass ceramic surface at an angle.
2. Removeresidues by sliding the blade over the surface.
3. Wipe the appliance with a damp cloth and a little washing up liquid.
4. Rub the appliance dry using a clean cloth.

IMPORTANT!
Remove stubborn residues with a cleaner for glass ceramic or stainless steel.

IMPORTANT!
Scratches or dark stains on the glass ceramic that cannot be re- moved do not however affect the functioning of the appliance.

WARNING!
Residues from cleaning agents will damage the appliance. Remove residues with water and washing up liquid.

TROUBLESHOOTING

Problem	Possible cause	Remedy
Red rings, limescale or water rings, shiny metallic or other discolouration, scratches/shadows, bubbles or other miscellaneous marks or stains on ceramic glass cooktop surface.	Cooktop surface has not been cleaned correctly. Cleaning/ maintenance of the cooktop surface is not covered under warranty. If a service call is placed to clean the cooktop you will be charged for the visit.	Use a ceramic glass cleaner such as Cerapol.
Pitting of ceramic glass surface.	Spillovers of liquid with high sugar content.	These types of spills must be removed immediately with a special scraper for the glass. If not permanent damage to the cooktop glass can occur which is not covered under warranty.
The cooking zones will not switch on or are not functioning.	• More than 10 seconds have passed since the appliance was switched on.	Switch the appliance on again.
	• The child safety device is switched on L.	Deactivate the child safety device (See the section “Child safety device”).
	• Several sensor fields were touched at the same time.	Only touch one sensor field.
	• Automatic switch off has been triggered.	Remove any objects (pan, cloths, etc.) that are lying on the control panel. Switch the appliance on again.
	• The lock is switched on L.	Switch off the lock (See the section “Locking/unlocking the control panel”).
Acoustic signal sounds when appliance is switched off.	The control panel is wholly or partly covered by objects.	Remove objects.
The residual heat indicator is not displaying anything.	The cooking zone was only on for a short time and is therefore not hot.	If the cooking zone is supposed to be hot, call the Customer Service Department.
The automatic warm up function is not switching itself on.	• There is still residual heat on the cooking zone H.	Let the cooking zone cool down.
	• The highest heat setting is set 9.	The highest heat setting has the same power as the automatic warm up function.
	• The heat setting was set using the sensor field –.	1. Switch off the cooking zone 2. Set the cooking zone using the sensor field +.
Acoustic signal sounds and appliance switches itself on and then off again; after 5 seconds another acoustic signal sounds.	The On/Off sensor field has been covered up, e.g. by a cloth.	Do not place any objects on the control panel.
- is lit.	• Overheating protection for the cooking zone has been triggered.	Switch off the cooking zone. Switch the cooking zone on again.
	• Automatic switch off has been triggered.	Switch off the cooking zone. Switch the cooking zone on again.
E and number are displayed.	Electronics fault.	Disconnect the appliance from the electrical supply for a few minutes (Take the fuse out of the house’s wiring system) If after switching on again, E is displayed again, call the customer service department.

If you are unable to remedy the problem by following the above suggestions, please contact your dealer or the Customer Care Department.

WARNING!

Repairs to the appliance are only to be carried out by qualified service engineers. Considerable danger to the user may result from improper repairs.

IMPORTANT!

If the appliance has been wrongly operated, the visit from the customer service technician or dealer may not take place free of charge, even during the warranty period.

TECHNICAL DATA

Model	EHC644BA		EHC944BA	
PNC	949 163 264		949 163 265	
Product dimensions (w x d) mm	590 x 520		900 x 520	
Cut-out dimensions (w x d) mm	560 x 490 (485)		880 x 490 (485)	
Voltage (volts)	230		230	
Cycles (Hz)	50		50	
Service Cord	Not fitted		Not fitted	
Elements	**No. zones**	**Watts**	**No. zones**	**Watts**
Left front	3	2300/1600/800	3	2300/1600/800
Left rear	1	1200	1	1200
Right front	1	1200	1	1200
Right rear	1	1800	1	1800
Total		6500		6500

ENVIRONMENT!

Disposal

The symbol on the product or on its packaging indicates that this product may not be treated as household waste. Instead it should be taken to the appropriate collection point for the recycling of electrical and electronic equipment. By ensuring this product is disposed of correctly, you will help prevent potential negative consequences for the environment and human health, which could otherwise be caused by inappropriate waste handling of this product. For more detailed information about recycling of this product, please contact your local council, your household waste disposal service or the shop where you purchased the product.

Packaging material

The packaging materials are friendly to the environment and can be recycled. The plastic components are identified by marking: >PE<,>PS<, etc. Discard the packaging materials as household waste at the waste disposal facilities in your municipality.

INSTALLATION INSTRUCTIONS

WARNING!

This must be read! The laws, ordinances, directives and standards in force in the country of use are to be followed (safety regulations, proper recycling in accordance with the regulations, etc.)

IMPORTANT!

Installation may only be carried out by a qualified electrician. The minimum distances to other appliances and units are to be observed.

Anti-shock protection must be provided by the installation, for example drawers may only be installed with a protective floor directly underneath the appliance.

The cut surfaces of the worktop are to be protected against moisture using a suitable sealant. The sealant seals the appliance to the work top with no gap. Do not use silicon sealant between the appliance and the work top. Avoid installing the appliance next to doors and under windows. Otherwise hot cookware may be knocked off the rings when doors and windows are opened.

WARNING!

Risk of injury from electrical current.

- The electrical mains terminal is live.
- Make electrical mains terminal free of voltage.
- Follow connection schematic.
- Observe electrical safety rules.
- Ensure anti-shock protection by installing correctly.
- The appliance must be connected to the electrical supply by a qualified electrician.
- Loose and inappropriate plug and socket connections can make the terminal overheat.
- Have the clamping connections correctly installed by a qualified electrician.
- Use strain relief clamp on cable.

WARNING!

The surface temperature exceeds 95°C. To avoid a hazard, underbench access must be restricted.

Electrical Connection

Before connecting, check that the nominal voltage of the appliance, that is the voltage stated on the rating plate, corresponds to the available supply voltage. Also check the power rating of the appliance and ensure that the wire is suitably sized in accordance with local wiring rules to suit the appliance power rating. The rating plate is located on the lower casing of the hob. The heating element volt- age is AC230V~. The appliance also works perfectly on networks with AC220V~ or AC240V~. Means for disconnection must be incorporated in the fixed wiring in accordance with local wiring rules.The hob is to be connected to the mains using a device that allows the appliance to be disconnected from the mains at all poles with a contact opening width of at least 3 mm, eg. automatic line protecting cut-out, earth leakage trips or fuse. If this appliance's mains cable is damaged, it must be replaced by a special cable (type H05BB-F Tmax 90°C; or higher). The latter is available from the Customer Care Department. The connection must be carried out as shown in the diagram. The connecting links should be fitted according to the appropriate connection diagram. The earth lead is connected to terminal. The earth lead must be longer than leads carrying electric current. **The cable connections must be made in accordance with regulations and the terminal screws tightened securely.** Finally, the connecting cable is to be secured with the mains cable cleat and the covering closed by pressing firmly (lock into place). Before switching on for the first time, any protective foil or stickers must be removed from the glass ceramic surface.

WARNING!

Once connected to the mains supply check that all cooking zones are ready for use by briefly switching each on in turn at the maximum setting.

- A duplicate rating label is supplied with this unit. For easy identification of this unit after installation, stick it to a readily available surface adjacent to the cooktop.

Sticking on the seal

- Clean the worktop around the cutout area.
- Stick the single-sided adhesive sealing tape provided on the underside of the hob around the outside edge ensuring that it is not stretched. The two ends of the tape should join in the middle of one side. After trimming the tape (allow it to overlap by 2-3 mm), press the two ends together.

IMPORTANT!

The cut-out section in the worktop is illustrated in the drawing with the dimensions 560 x 490 / 880 x 490 mm. The appliance can also be built into a shorter cut-out section with the dimensions 560 x 485 / 880 x 485 mm.

ASSEMBLY

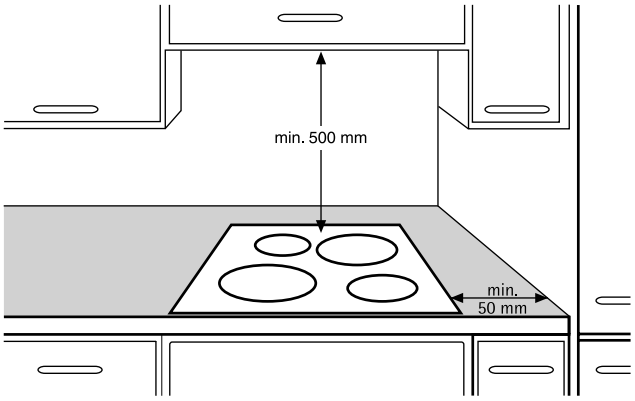

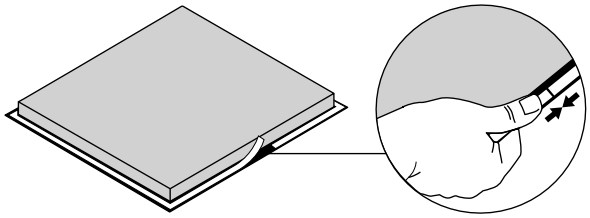

EHC644BA

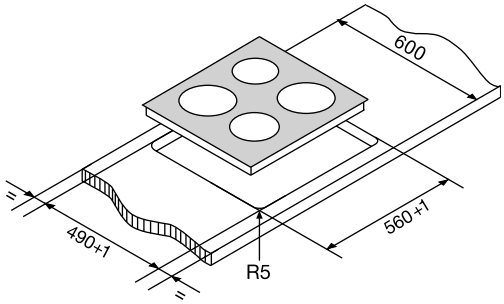

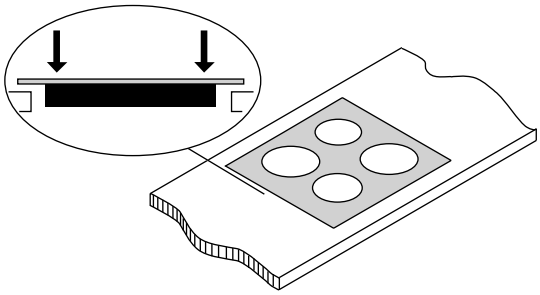

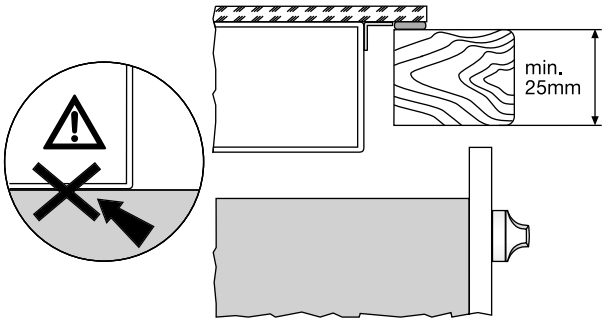

EHC944BA

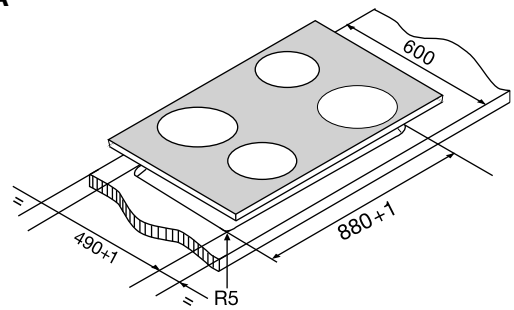

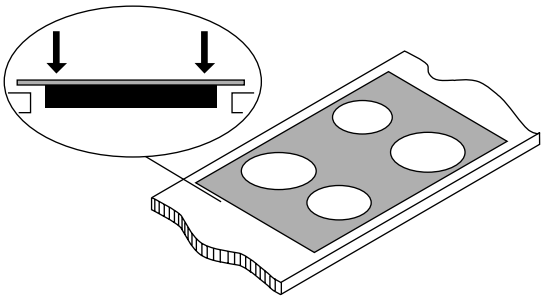

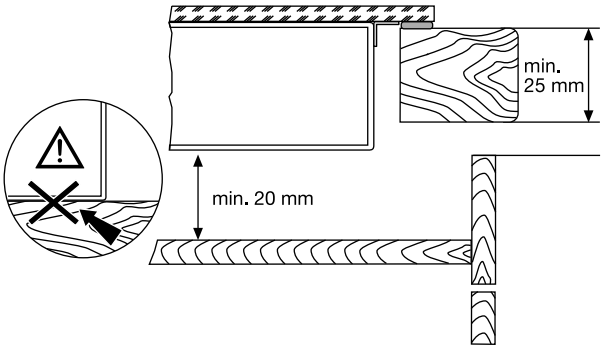

⚠ WARNING!
Surface temperatures of base exceed 95°C, under bench access must be restricted by use of non-combustible barrier on installation

NOTES

Electrolux Warranty

FOR SALES IN AUSTRALIA AND NEW ZEALAND
APPLIANCE: BUILT-IN OVEN, COOKTOP
AND FLOOR MOUNTED COOKER

This document sets out the terms and conditions of the product warranties for Electrolux Appliances. It is an important document. Please keep it with your proof of purchase documents in a safe place for future reference should you require service for your Appliance.

1. In this warranty
   (a) 'acceptable quality' as referred to in clause 10 of this warranty has the same meaning referred to in the ACL;
   (b) 'ACL' means Trade Practices Amendment (Australian Consumer Law) Act (No.2) 2010;
   (c) 'Appliance' means any Electrolux product purchased by you accompanied by this document;
   (d) 'ASC' means Electrolux' authorised service centres;
   (e) 'Electrolux' means Electrolux Home Products Pty Ltd of 163 O'Riordan Street, Mascot, NSW 2020, ABN 51 004 762 341 in respect of Appliances purchased in Australia and Electrolux (NZ) Limited of 3-5 Niall Burgess Road, Mount Wellington, in respect of Appliances purchased in New Zealand;
   (f) 'major failure' as referred to in clause 10 of this warranty has the same meaning referred to in the ACL and includes a situation when an Appliance cannot be repaired or it is uneconomic for Electrolux, at its discretion, to repair an Appliance during the Warranty Period;
   (g) 'Warranty Period' means:
      (i) where the Appliance is used for personal, domestic or household use (i.e. normal single family use) as set out in the instruction manual, the Appliance is warranted against manufacturing defects in Australia for 24 months and in New Zealand for 24 months, following the date of original purchase of the Appliance;
      (ii) where the Appliance is used for commercial purposes (including being used to directly assist a business or where the Appliance is used in a multi-family communal or share type environment), the Appliance will then be warranted against manufacturing defects in Australia for 3 months and in New Zealand for 3 months, following the date of original purchase of the Appliance.
   (h) 'you' means the purchaser of the Appliance not having purchased the Appliance for re-sale, and 'your' has a corresponding meaning.
2. This warranty only applies to Appliances purchased and used in Australia or New Zealand and is in addition to (and does not exclude, restrict, or modify in any way) any non-excludable statutory warranties in Australia or New Zealand.
3. During the Warranty Period Electrolux or its ASC will, at no extra charge if your Appliance is readily accessible for service, without special equipment and subject to these terms and conditions, repair or replace any parts which it considers to be defective. Electrolux or its ASC may use remanufactured parts to repair your Appliance. You agree that any replaced Appliances or parts become the property of Electrolux. This warranty does not apply to light globes, batteries, filters or similar perishable parts.
4. Parts and Appliances not supplied by Electrolux are not covered by this warranty.
5. You will bear the cost of transportation, travel and delivery of the Appliance to and from Electrolux or its ASC. If you reside outside of the service area, you will bear the cost of:
   (a) travel of an authorised representative;
   (b) transportation and delivery of the Appliance to and from Electrolux or its ASC,

   In all instances, unless the Appliance is transported by Electrolux or an Electrolux authorised representative, the Appliance is transported at the owner's cost and risk while in transit to and from Electrolux or its ASC.
6. Proof of purchase is required before you can make a claim under this warranty.
7. You may not make a claim under this warranty unless the defect claimed is due to faulty or defective parts or workmanship. Electrolux is not liable in the following situations (which are not exhaustive):
   (a) the Appliance is damaged by:
      (i) accident
      (ii) misuse or abuse, including failure to properly maintain or service
      (iii) normal wear and tear
      (iv) power surges, electrical storm damage or incorrect power supply
      (v) incomplete or improper installation
      (vi) incorrect, improper or inappropriate operation
      (vii) insect or vermin infestation
      (viii) failure to comply with any additional instructions supplied with the Appliance;
   (b) the Appliance is modified without authority from Electrolux in writing;
   (c) the Appliance's serial number or warranty seal has been removed or defaced;
   (d) the Appliance was serviced or repaired by anyone other than Electrolux, an authorised repairer or ASC.
8. This warranty, the contract to which it relates and the relationship between you and Electrolux are governed by the law applicable where the Appliance was purchased. Where the Appliance was purchased in New Zealand for business purposes the Consumer Guarantee Act does not apply.
9. To the extent permitted by law, Electrolux excludes all warranties and liabilities (other than as contained in this document) including liability for any loss or damage whether direct or indirect arising from your purchase, use or non use of the Appliance.
10. For Appliances and services provided by Electrolux in Australia, the Appliances come with a guarantee by Electrolux that cannot be excluded under the Australian Consumer Law. You are entitled to a replacement or refund for a major failure and for compensation for any other reasonably foreseeable loss or damage. You are also entitled to have the Appliance repaired or replaced if the Appliance fails to be of acceptable quality and the failure does not amount to a major failure. The benefits to you given by this warranty are in addition to your other rights and remedies under a law in relation to the Appliances or services to which the warranty relates.
11. At all times during the Warranty Period, Electrolux shall, at its discretion, determine whether repair, replacement or refund will apply if an Appliance has a valid warranty claim applicable to it.
12. For Appliances and services provided by Electrolux in New Zealand, the Appliances come with a guarantee by Electrolux pursuant to the provisions of the Consumer Guarantees Act, the Sale of Goods Act and the Fair Trading Act.
13. To enquire about claiming under this warranty, please follow these steps:
   (a) carefully check the operating instructions, user manual and the terms of this warranty;
   (b) have the model and serial number of the Appliance available;
   (c) have the proof of purchase (e.g. an invoice) available;
   (d) telephone the numbers shown below.
14. You accept that if you make a warranty claim, Electrolux and its ASC may exchange information in relation to you to enable Electrolux to meet its obligations under this warranty.

Important Notice

Before calling for service, please ensure that the steps listed in point 13 above have been followed.

FOR SERVICE or to find the address of your nearest state service centre in Australia **PLEASE CALL 13 13 49** For the cost of a local call (Australia only)	**SERVICE AUSTRALIA** Electrolux ELECTROLUX HOME PRODUCTS www.electrolux.com.au	**FOR SPARE PARTS** or to find the address of your nearest state spare parts centre in Australia **PLEASE CALL 13 13 50** For the cost of a local call (Australia only)
FOR SERVICE or to find the address of your nearest authorised service centre in New Zealand **FREE CALL 0800 10 66 10** (New Zealand only)	**SERVICE NEW ZEALAND** Electrolux ELECTROLUX HOME PRODUCTS www.electrolux.co.nz	**FOR SPARE PARTS** or to find the address of your nearest state spare parts centre in New Zealand **FREE CALL 0800 10 66 20** (New Zealand only)

Electrolux Home Products Australia
telephone: 1300 363 640
fax: 1800 350 067
email: customercare@electrolux.com.au
web: www.electrolux.com.au

Electrolux Home Products New Zealand
telephone: 0800 234 234
fax: 0800 363 600
email: customercare@electrolux.co.nz
web: www.electrolux.co.nz

The Thoughtful Design Innovator.

Do you remember the last time you opened a gift that made you say "Oh! How did you know? That's exactly what I wanted!" That's the kind of feeling that the designers at Electrolux seek to evoke in everyone who chooses or uses one of our products. We devote time, knowledge, and a great deal of thought to anticipating and creating the kind of appliances that our customers really need and want.

This kind of thoughtful care means innovating with insight. Not design for design's sake, but design for the user's sake. For us, thoughtful design means making appliances easier to use and tasks more enjoyable to perform, freeing our customers to experience that ultimate 21st century luxury, ease of mind. Our aim is to make this ease of mind more available to more people in more parts of their everyday lives, all over the world. So when we say we're thinking of you, you know we mean just that.

The "Thinking of you" promise from Electrolux goes beyond meeting the needs of today's consumers. It also means we're committed to making appliances safe for the environment—now and for future generations.

Electrolux. Thinking of you.

Share more of our thinking at www.electrolux.com.au or www.electrolux.co.nz

P/No. 305518307

© 2013 Electrolux Home Products Pty Ltd.
ABN 51 004 762 341

EMAN_CGH_EHC644BA_UM_Jul13